Work Order ID 71346

Tuesday, June 28, 2011 1:29:58 PM

Item ID: D205-523-043 **Accept** **Setup Start** **Stop**

Revision ID:

Item Name: Slide Bar Assembly

Start Date: 6/28/2011 **Start Qty:** 4.00 **Cust Item ID:**

Required Date: 7/8/2011 **Req'd Qty:** 4.00 **Customer:**

Reference:

Approvals: **Process Plan:** H **Date:** 11-06-28 **Tooling:** _____ **Date:** _____ **Run Start** **Stop**

QC: _____ **Date:** _____ **SPC (Y/N):** _____ **Date:** _____

Sequence ID/ Work Center ID	Operation Description	Set Up/ Run Hours	Tool ID	Tool #	Plan Code	Accept Qty	Reject Qty	Reject Number	Insp. Stamp
Draw Nbr	**Revision Nbr**								
d205-523	Rev F								
100	Pick Kit	0.00							
Packaging	**Memo**	0.00							
Packaging									
110		0.00							
Small Fab	Small Fab								
Small Fab	**Memo**	0.00							
Small Fab	Assemble as per Dwg D205-523-043								
120	QC5- Inspect part completeness to step on W/O	0.00							
QC	**Memo**	0.00							
Quality Control									

11/08/10 (4)

11/08/10 (4)

5 11/08/10

(44)

Dart Aerospace Ltd

W/O:		WORK ORDER CHANGES					
DATE	STEP	PROCEDURE CHANGE	By	Date	Qty	Approval Chief Eng / Prod Mgr	Approval QC Inspector

Part No: _____ **PAR #:** _____ **Fault Category:** _____ **NCR:** Yes No **DQA:** _____ **Date:** _____

Resolution: _____ **Disposition:** _____ **QA: N/C Closed:** _____ **Date:** _____

NCR:		WORK ORDER NON-CONFORMANCE (NCR)						
DATE	STEP	Description of NC Section A	Corrective Action Section B			Verification Section C	Approval Chief Eng	Approval QC Inspector
			Initial Chief Eng	Action Description Chief Eng	Sign & Date			

NOTE: Date & initial all entries

H:\fFORMS\Quality Assurance\approved QA\NCRWO RevE

Work Order ID 71346

Tuesday, June 28, 2011 1:29:59 PM

Item ID: D205-523-043

Revision ID:

Item Name: Slide Bar Assembly

Start Date: 6/28/2011 **Start Qty:** 4.00

Required Date: 7/8/2011 **Req'd Qty:** 4.00

Reference:

Accept

Setup Start

Stop

Cust Item ID:

Customer:

Run Start

Stop

Approvals: **Process Plan:** _____ **Date:** _____ **Tooling:** _____ **Date:** _____

QC: _____ **Date:** _____ **SPC (Y/N):** _____ **Date:** _____

Sequence ID/ Work Center ID	Operation Description	Set Up/ Run Hours	Tool ID	Tool #	Plan Code	Accept Qty	Reject Qty	Reject Number	Insp. Stamp
130	Identify as per dwg & Stock Location:_____	0.00							
Packaging	Memo PDP 71345	0.00							
Packaging									
140	QC21- Final Inspection - Work Order Release	0.00							
QC	Memo	0.00							
Quality Control									

11/08/10 (4)

CK 11/08/11

11-08-11 (4)

Dart Aerospace Ltd

W/O:		WORK ORDER CHANGES					
DATE	STEP	PROCEDURE CHANGE	By	Date	Qty	Approval Chief Eng / Prod Mgr	Approval QC Inspector

Part No: _____ **PAR #:** _____ **Fault Category:** _____ **NCR:** Yes No **DQA:** _____ **Date:** _____

Resolution: _____ **Disposition:** _____ **QA: N/C Closed:** _____ **Date:** _____

NCR:		WORK ORDER NON-CONFORMANCE (NCR)						
DATE	STEP	Description of NC Section A	Corrective Action Section B			Verification Section C	Approval Chief Eng	Approval QC Inspector
			Initial Chief Eng	Action Description Chief Eng	Sign & Date			

NOTE: Date & initial all entries

H:\fFORMS\Quality Assurance\approved QA\NCRWO RevE

Picklist Print

Tuesday, June 28, 2011 1:30:05 PM

Work Order ID: 71346

Parent Item: D205-523-043

Parent Item Name: Slide Bar Assembly

Start Date: 6/28/2011 **Required Date:** 7/8/2011

Start Qty: 4.00 **Required Qty:** 4.00

Comments: IPP B□02.04.04□Updated Drawing and Added Inspection Level 21□SM□

Component Item ID/ Item Name	Replacement Item ID	Mfg/ Purch	Bin Item	Primary Location	Last Location	Route Seq ID	Unit of Measure	Qty on Hand	Qty per Kit	Total Qty	Qty Issued	Date Issued	Status
D3011-1		Manufactured	No			110	Each	0.0000	1	4			
Rappel						B69692		(4x)			11/08/10		
AN960JD616L		Purchased	No			110	Each	67.0000	2	8			
Washer											11/08/10		
				Location			**Loc Qty**		**Loc Code**				
				ST347			67						
					111819		67			8			
MS21042L6		Purchased	No			110	Each	341.0000	2	8			
Nut											11/08/10		
				Location			**Loc Qty**		**Loc Code**				
				ST300			341						
					117343		41						
					117677		200						
					118078		100			8			
33116		Purchased	No			110	Each	10.0000	2	8			
Stud Fitting											11/08/10		
				Location			**Loc Qty**		**Loc Code**				
				ST401			10						
					112477		10			8			

Dart Aerospace Ltd

W/O:		WORK ORDER CHANGES					
DATE	STEP	PROCEDURE CHANGE	By	Date	Qty	Approval Chief Eng / Prod Mgr	Approval QC Inspector

Part No: _____ **PAR #:** _____ **Fault Category:** _____ **NCR:** Yes No **DQA:** _____ **Date:** _____

Resolution: _____ **Disposition:** _____ **QA: N/C Closed:** _____ **Date:** _____

NCR:		WORK ORDER NON-CONFORMANCE (NCR)						
DATE	STEP	Description of NC Section A	Corrective Action Section B			Verification Section C	Approval Chief Eng	Approval QC Inspector
			Initial Chief Eng	Action Description Chief Eng	Sign & Date			

NOTE: Date & initial all entries

H:\fFORMS\Quality Assurance\approved QA\NCRWO RevE

Picklist Print

Tuesday, June 28, 2011 1:30:05 PM

Work Order ID: 71346

Parent Item: D205-523-043

Parent Item Name: Slide Bar Assembly

Start Date: 6/28/2011 **Required Date:** 7/8/2011

Start Qty: 4.00 **Required Qty:** 4.00

D3012-1	Manufactured	No	110	Each	7.0000	2	8	11/08/10	
Decal									

Location	Loc Qty	Loc Code	
ST028	7		B72013 (5x)
63194	2		
69693	5		3

D3012-3	Manufactured	No	110	Each	7.0000	2	8	11/08/10	
Decal									

Location	Loc Qty	Loc Code	
ST028	7		B72014 (5x)
69695	7		3

D3012-5	Manufactured	No	110	Each	6.0000	2	8	11/08/10	
Decal									

Location	Loc Qty	Loc Code	
ST028	6		B72015 (6x)
69694	6		2

Dart Aerospace Ltd

W/O:		WORK ORDER CHANGES					
DATE	STEP	PROCEDURE CHANGE	By	Date	Qty	Approval Chief Eng / Prod Mgr	Approval QC Inspector

Part No: _____ **PAR #:** _____ **Fault Category:** _____ **NCR:** Yes No **DQA:** _____ **Date:** _____

Resolution: _____ **Disposition:** _____ **QA: N/C Closed:** _____ **Date:** _____

NCR:		WORK ORDER NON-CONFORMANCE (NCR)						
DATE	STEP	Description of NC Section A	Corrective Action Section B			Verification Section C	Approval Chief Eng	Approval QC Inspector
			Initial Chief Eng	Action Description Chief Eng	Sign & Date			

NOTE: Date & initial all entries

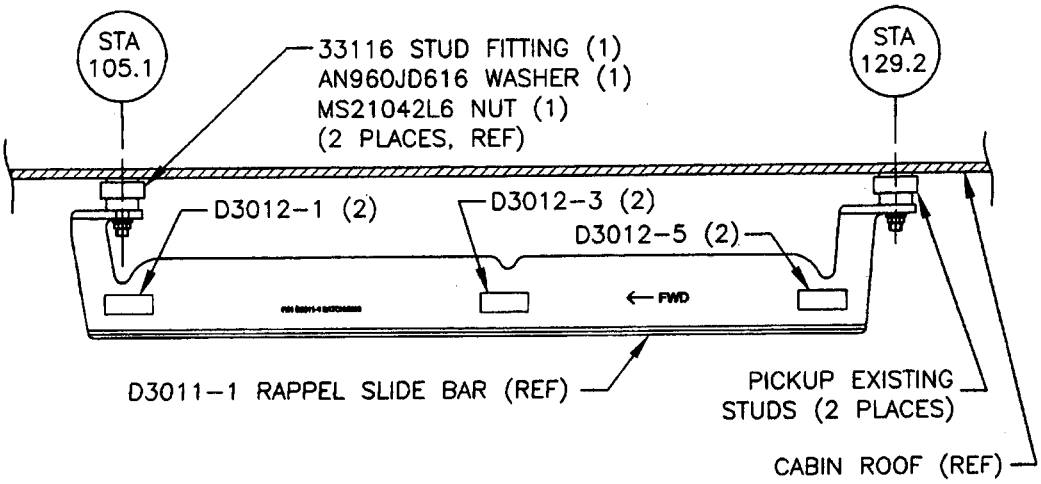

Figure 25-3: Installation of D205-523-043 Slide Bar Assembly (View Looking Inboard)

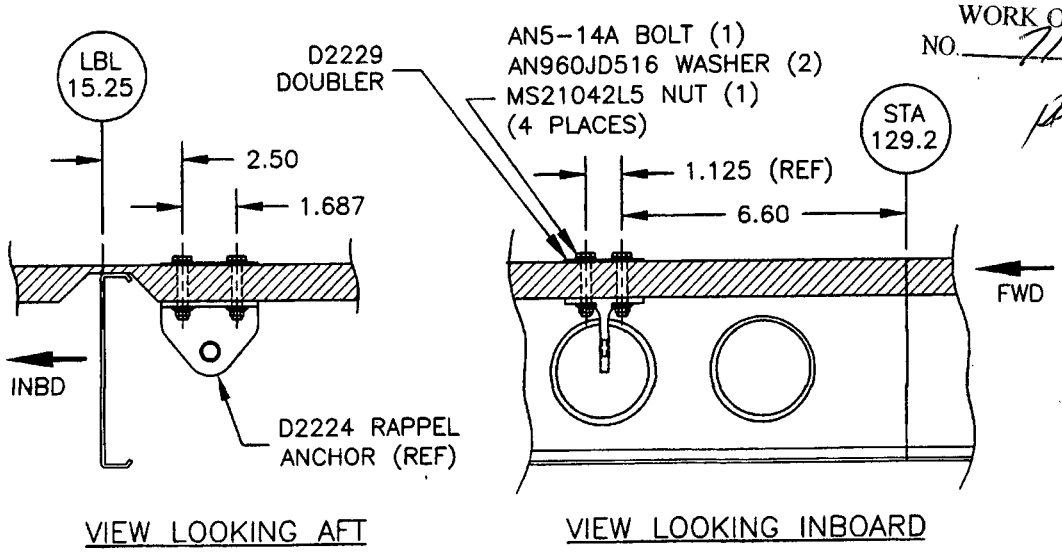

Figure 25-4: D2224 Rappel Anchor Installation

Dart Aerospace Ltd

W/O:		WORK ORDER CHANGES					
DATE	STEP	PROCEDURE CHANGE	By	Date	Qty	Approval Chief Eng / Prod Mgr	Approval QC Inspector

Part No: _____ **PAR #:** _____ **Fault Category:** _____ **NCR:** Yes No **DQA:** _____ **Date:** _____

Resolution: _____ **Disposition:** _____ **QA: N/C Closed:** _____ **Date:** _____

NCR:		WORK ORDER NON-CONFORMANCE (NCR)						
DATE	STEP	Description of NC Section A	Corrective Action Section B			Verification Section C	Approval Chief Eng	Approval QC Inspector
			Initial Chief Eng	Action Description Chief Eng	Sign & Date			

NOTE: Date & initial all entries

H:\fFORMS\Quality Assurance\approved QA\NCRWO RevE